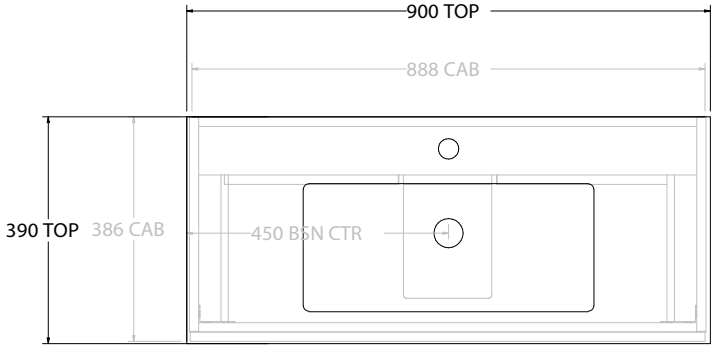

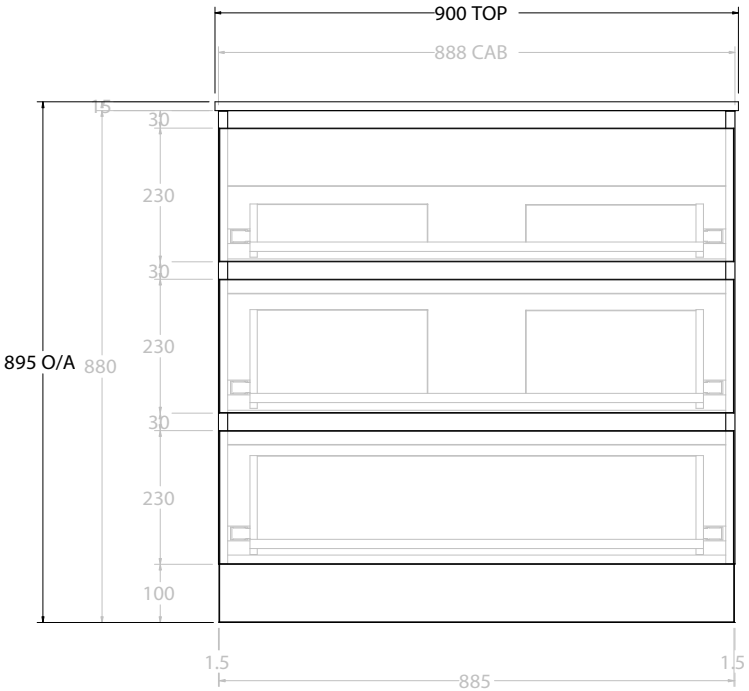

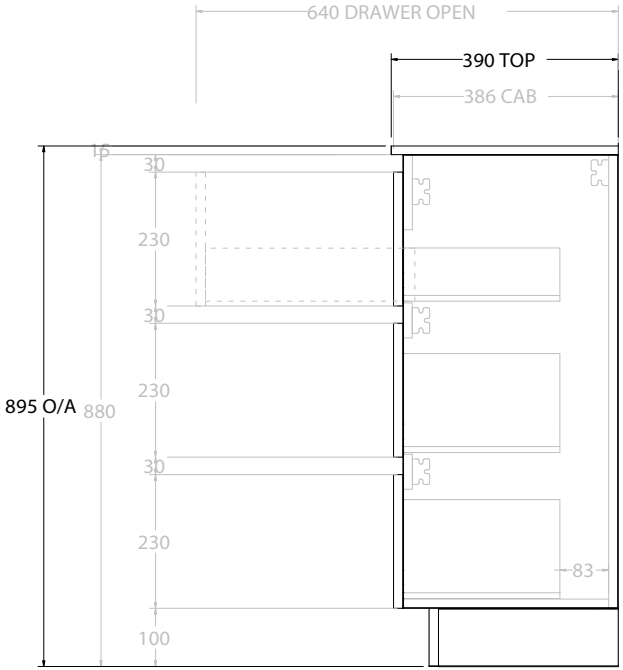

Adp

PRODUCT:	GLACIER ENSUITE ALL-DRAWER TRIO 900 FLOOR MOUNT CENTRE BASIN		
CODE:	LITE: GLLEAT0900WKCCM	PRO: GLPEAT0900WKCCM	
MOUNTING:	FLOOR MOUNT		
SIZE:	900W X 390D X 895H		
CONFIGURATION:	ALL-DRAWER		
VERSION: 01	DATE: 12/09/22		

TOP:	CAST MARBLE LOLA 900
BASIN POSITION:	CENTRE BASIN

NOTES:

ALL DIMENSIONS ARE NOMINAL AND SUBJECT TO CHANGE.
DO NOT DRILL OR ROUGH IN UNTIL YOU HAVE RECEIVED AND MEASURED YOUR PRODUCT.
ALL DIMENSIONS ARE IN MILLIMETRES.
DO NOT MEASURE FROM DRAWING.